KOBELCO SK200LC IV EXCAVATOR
SWING BEARING DIAGRAM

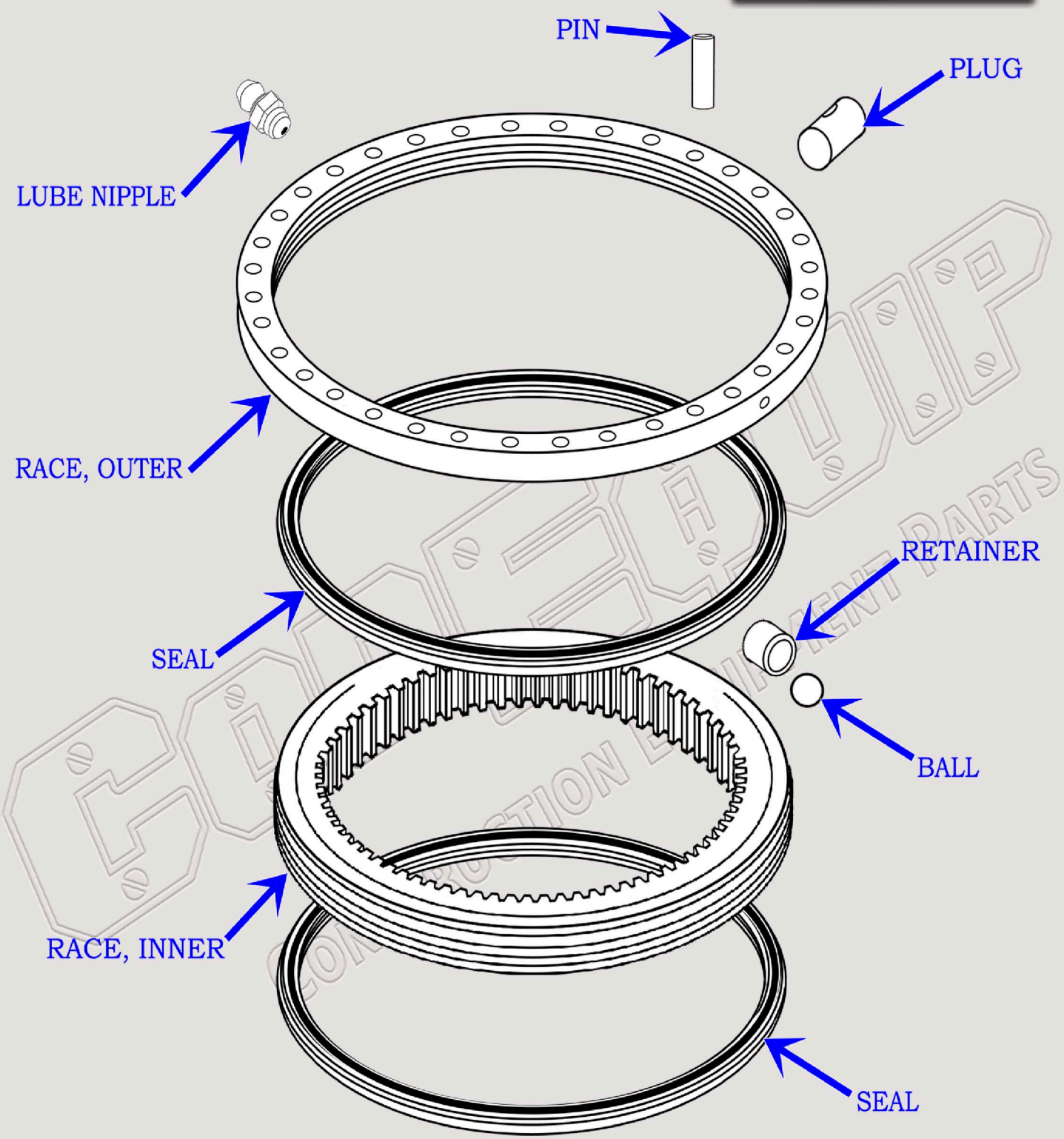

PART NUMBER & ALTERNATIVES:
24100N7440F1; 24100N6347F1

888-983-7847
WWW.CONEQUIP.COM
© 2018 CONEQUIP PARTS & EQUIPMENT LLC

KOBELCO